KARAJET® Group

FT14 and FT14HC Ball Float Steam Trap

Description

FT14 and FT14HC are ball float steam traps with stainless steel internals and air vent valve. These horizontal traps are easy to maintain. Flow direction on body shall be considered when being installed.

Thermostatic element

The thermostatic element is designed to vent air in startup and prevent steam loss when operating.

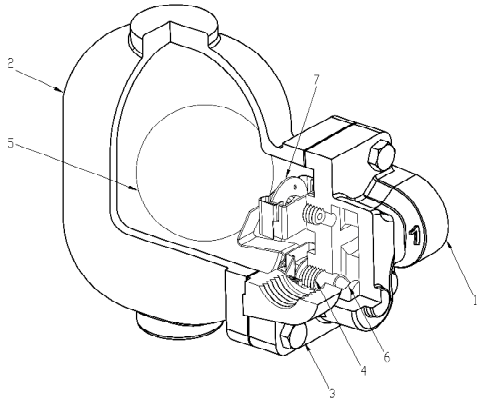

FT14 1" HC

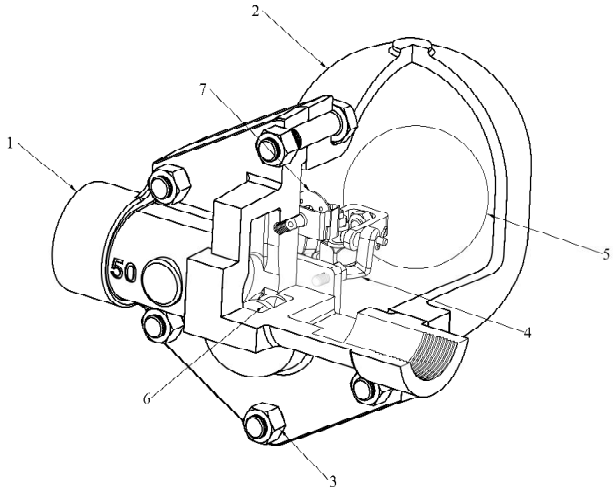

FT14 2"

Material

NO.	Part	Material
1	Body	Cast Iron
2	Cover	Cast Iron
3	Cover bolts and nuts	Carbon steel
4	Valve seat	Stainless steel
5	Ball float and lever	Stainless steel
6	Erosion deflector	Stainless steel
7	Air vent assembly	Stainless steel

Dimensions / weights (approximate) in mm and kg

Screwed								
Size	A	B	C	D	E	F	G	Weight
1" HC	120	84	111	195	160	125	224	6.8
$1\frac{1}{4}$"	120	84	111	195	160	125	224	6.9
$1\frac{1}{2}$"	270	125	125	250	200	147	290	17.5
2"	300	125	125	250	200	147	290	22.0

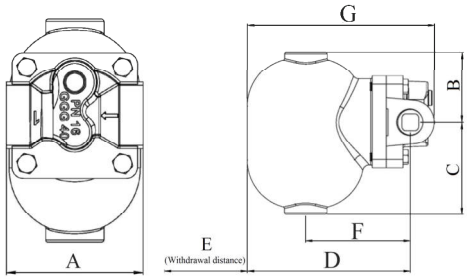

Flanged									
Size	A		B	C	D	E	F	Weight	
	#150	#300						#150	#300
$\frac{1}{2}$"	203	209	84	111	205	120	135	8.3	8.7
$\frac{3}{4}$"	206	213	84	111	205	120	135	8.6	9.3
1"	209	216	84	111	205	170	135	9	10.1
$1\frac{1}{2}$"	314	320	138	125	251	200	147	28.5	30.6
2"	314	320	138	125	251	200	147	29.2	30.7

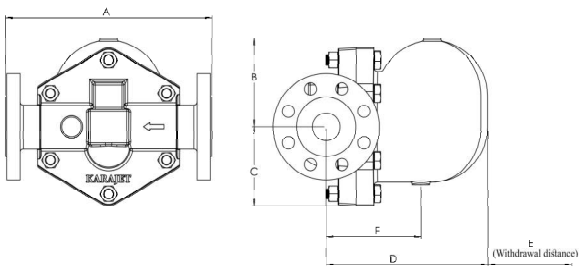

Phone:051-35413212 **Email**: info@karajet.com **Website**: www.karajet.com

FT14 and FT14HC Ball Float Steam Trap

Available spares

Main valve assembly
Ball float ($1\frac{1}{2}$" and 2")
Air vent assembly
Complete set of gaskets

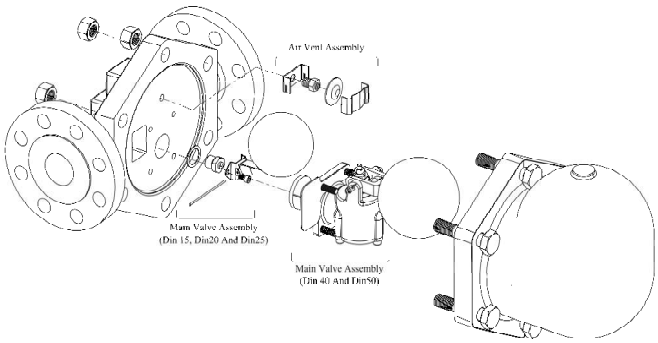

Pressure / temperature limits

Screwed	$1"HC, 1\frac{1}{4}$"	$1\frac{1}{2}$", 2"
Flanged	$1"HC, \frac{1}{2}", \frac{3}{4}"$	
Body design conditions	PN25	PN16
PMA (Max. allowable pressure)	25 barg @ 100°C	16 barg @ 100°C
TMA (Max. allowable temp.)	300 °C @ 18 barg	220 °C @ 13.5 barg
PMO (Max. operating pressure for saturated steam service)	21 barg	14 barg
TMO (Max. operation temp.)	275 °C @ 19 barg	220 °C @ 13.5 barg
Min. allowable temp.	-10 °C	-10 °C
Min. operating temp. For lower temperatures consult Karajet.	0 °C	0 °C
Max. cold hydraulic test pressure	38 barg	24 barg

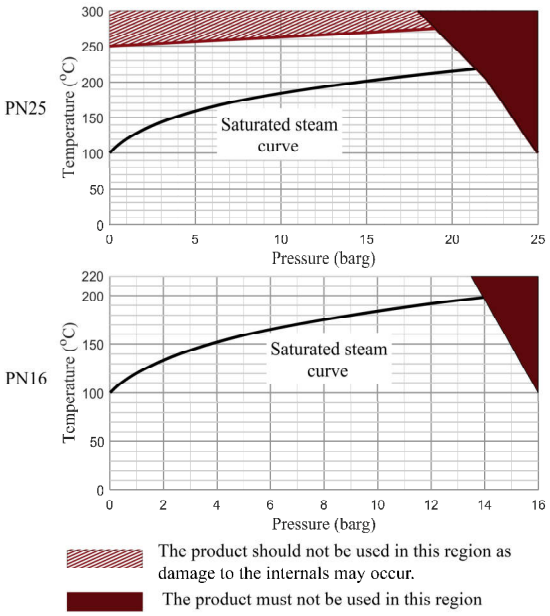

Capacities

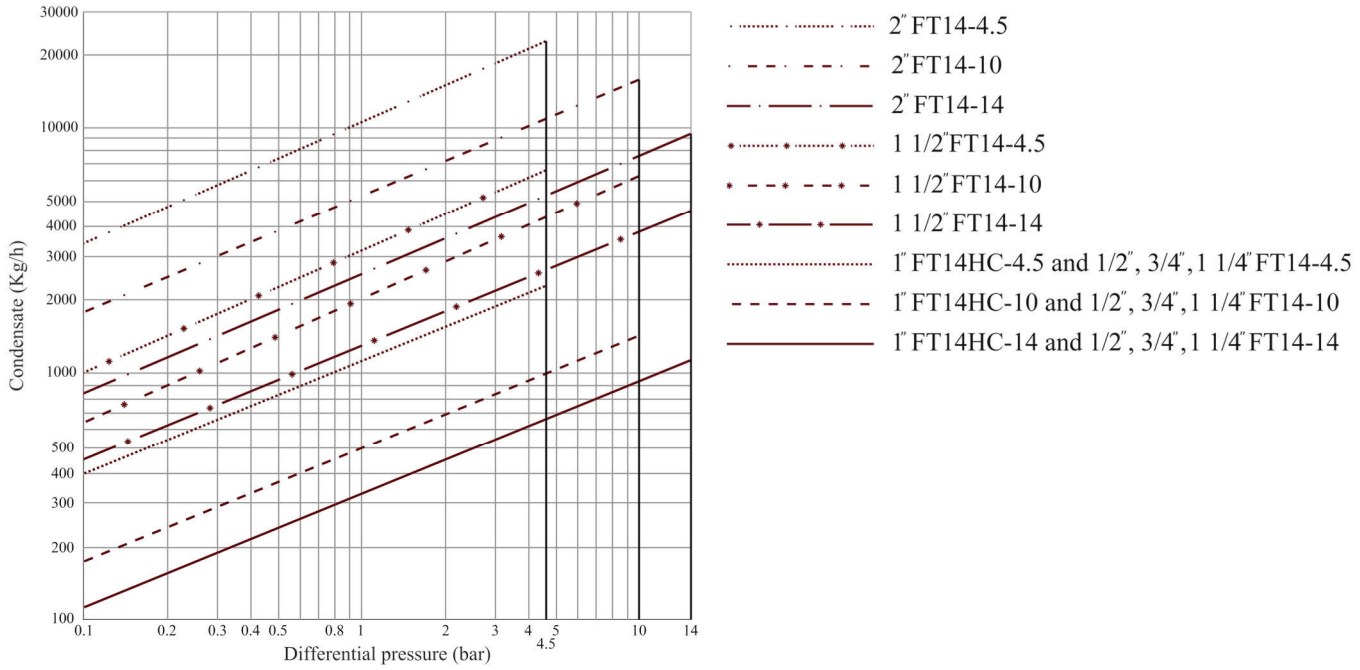

Phone:051-35413212 **Email**: info@karajet.com **Website**: www.karajet.com