KARAJET

Desuperheater
Superheated steam is not always desirable, for instance in those applications that heat transfer coefficient is important, saturated steam is preferred. ***Desuperheaters*** can reduce the temperature of steam or any other superheated vapor near to its saturated temperature by means of water or another coolant. Water is introduced into the process line and comes into direct contact with the superheated steam.

General Usage	***Typical Applications in Industries***
In order to reduce the outlet temperature of superheated medium to its saturation temperature in case of process equipment that is designed for lower temperatures, and processes that require precise temperature control.	❖ Stabilizing superheat after boiler, since boilers produce variable temperature steam in ***process industries.*** ❖ Turbine bypass systems in ***power plants.*** ❖ Before surface condensers to increase the efficiency and prevent stresses by thermal expansions in ***oil and gas industries***, ***petrochemical plants*** and ***power plants.*** ❖ To improve heat transfer of surface type heat exchangers in ***oil and gas industries***, ***petrochemical plants*** and ***food industry.*** ❖ To control superheat temperature when boilers does not work at their full load in ***power plants, chemical industry and food industry.*** ❖ In ***paper and board industry*** for paper drying machines. ❖ In ***pharmaceutical industry*** for process heaters. ❖ Steam moistening plants in ***textile industry.***

Advantages	❖ No moving parts ❖ Low maintenance cost ❖ Simple and compact ❖ Optional control package

Applicable Materials	❖ Stainless Steel ❖ Carbon Steel ❖ Low alloy steel ❖ Hastelloy

Design Codes/ Standards	***Quality Assurance***
❖ ASME Sec. VIII, div. 1 ❖ ASME B31.3	

Kara Desuperheater Advantages:	❖ Covering wide range of applications ❖ Custom-designed according to operating conditions

Kara Desuperheater Types:

Venturi Type: Cooling medium is piped into the venturi nozzle and atomized. Venturi types are subdivided into the followings:

- Single Venturi Type

Turndown ratio	2:1
Pressure drop	negligible
Outlet superheat	20 °F

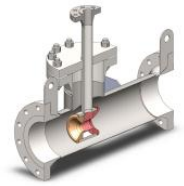

- Double Venturi Type

Turndown ratio	5:1
Pressure drop	negligible
Outlet superheat	10 °F

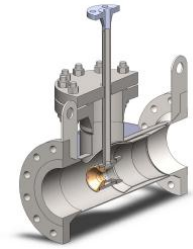

In case of vertical installation, turn down ratio can increase to 10:1.

Specifications of one Type			
Item	Venturi Desuperheater		
Project	JAM ABS & RUBBERS PLANT		
Purchaser	Jondishapour Co.		
Steam flowrate	Kg/hr	55129	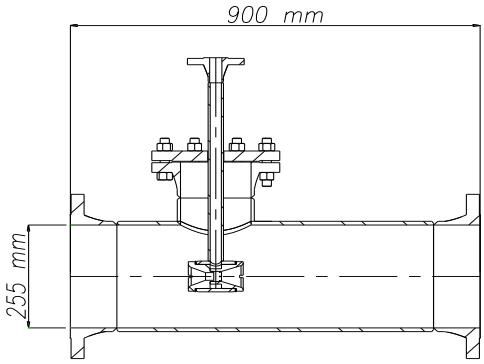
Outlet superheat	°F	20	
Turndown ratio	-	1:3	